**TEAR SHEET**

**Sarnen Large Pendant**
Item # ARN 5357WHT-WG

Designer: AERIN

O/A Height: 55.5"
Fixture Height: 19"
Min. Custom Height: 25"
Width: 18.25"
Canopy: 5" Round
Finishes: BLK, BSL, G, WHT
Glass Options: WG
Socket: E26 Keyless
Wattage: 22 LED A19
Weight: 21 Pounds
Note: Custom Height Available

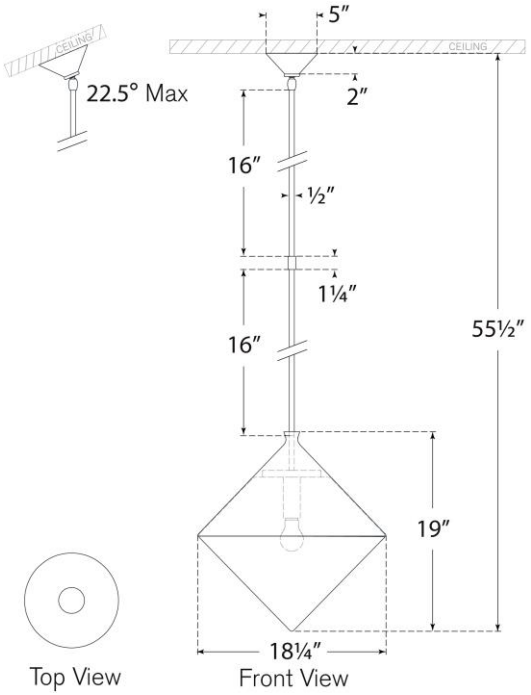


VISUAL COMFORT & CO.